HEAT TREATMENT AND FINAL FINISH
PHOSPHATE BLACK

PHYSICAL PROPERTIES	
Y. P.	
T. S.	
EL. 2	
RED	
BR.	
ROCK.	
SCL.	

JULY 22, 1943
REVISIONS

DRG. PERTAINS TO	
51-125	GUN, MACH., CAL. .30 BROWNG M1919A6

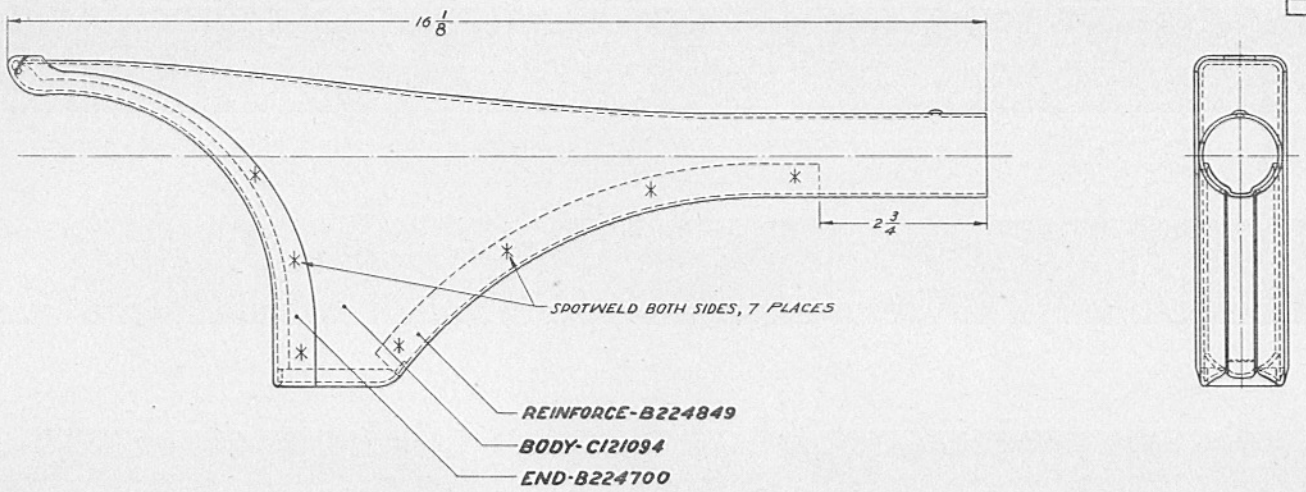

STOCK, SHOULDER, ASSEMBLY
WELDING DIAGRAM

C94543

WITH B224700, B224849 AND C121094
SUPERSEDES OLD VELLUM C121094
UNDER REVISION DATE OF

0 1 2 3 4 5 6 7 8 9 10 11 INCHES

C94543

TOLERANCE ON DIMENSIONS NOT OTHERWISE SPECIFIED
DECIMAL ± —
FRACTIONAL ± 1/32
ANGULAR ± —

DRAFTSMAN	TRACER	L'D'S DRAFTSMAN
B.O.F.	B.O.F.	HAR
CHIEF DRAFTSMAN		CHIEF DRAFTSMAN

SUBMITTED:
A.H. Roe

APPROVED BY ORDER OF THE CHIEF OF ORDNANCE
Chas. C. Kirkpatrick
CHIEF ORD. DEPT., U. S. A.

ORDNANCE DEPT., U. S. A.
MADE AT ROCK ISLAND ARSENAL

HEAT TREATMENT AND FINAL FINISH

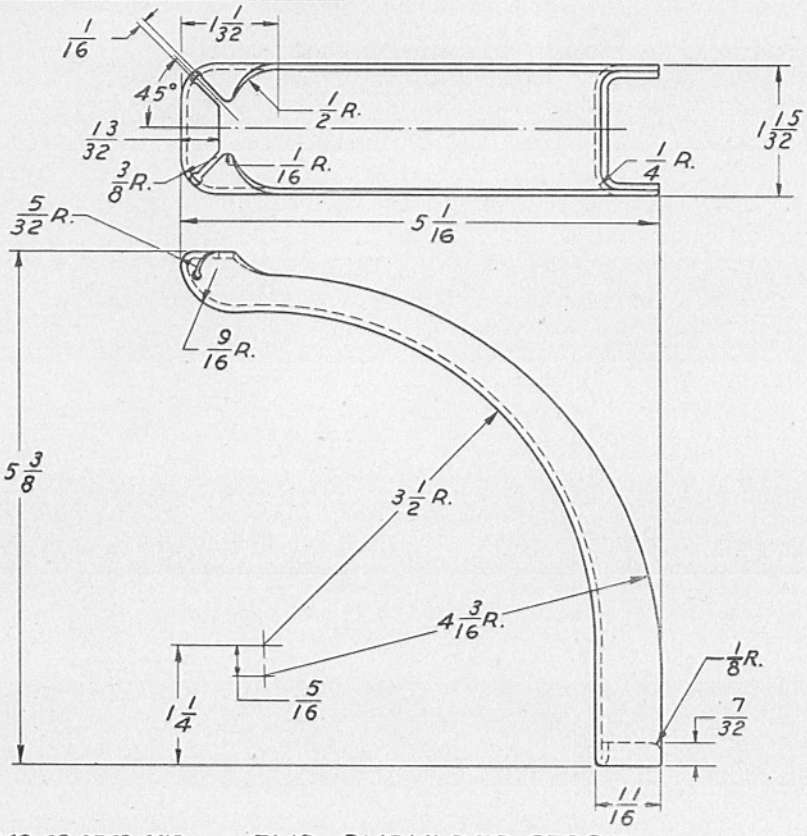

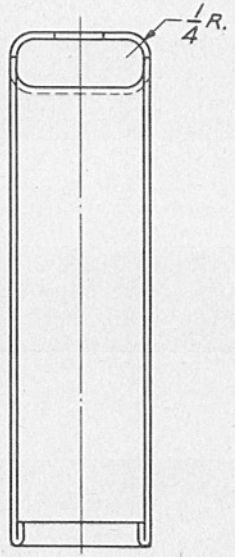

WITH B224849, C94543 AND C121094 SUPERSEDES OLD VELLUM C121094 UNDER REVISION DATE OF

END, SHOULDER STOCK

STEEL WD 1010

.0478 (NO. 18 U.S.S. GAGE) THICK

MANUFACTURING COMPONENT

SCALE 1/1

B224700

PHYSICAL PROPERTIES	
Y. P.	
T. S.	
EL. 2	
RED.	
BR.	
ROCK	
SCL.	

JULY 22, 1943

REVISIONS

DRG. PERTAINS TO	
51-125	GUN, MACH., CAL..30 BROWNG, M1919A6
C94543	STOCK, SHOULDER, ASS'Y.

TOLERANCE ON DIMENSIONS NOT OTHERWISE SPECIFIED
DECIMAL ± —
FRACTIONAL ± 1/64
ANGULAR ± 2°

DRAFTSMAN	TRACER	L'D'G DRAFTSMAN
D.O.F.	D.O.F.	H.H.R.
CHECKER		CHIEF DRAFTSMAN
H.W.G.		

SUBMITTED:

A.H. Roe

APPROVED BY ORDER OF THE CHIEF OF ORDNANCE:

Geo. L. Russum

CAPT. ORD. DEPT. U. S. A.

ORDNANCE DEPT., U. S. A.

MADE AT ROCK ISLAND ARSENAL

HEAT TREATMENT AND FINAL FINISH

PHYSICAL PROPERTIES	
Y. P.	
T. S.	
EL. 2	
RED.	
BR.	
ROCK	
SCL.	

JULY 22, 1943

REVISIONS

DRG. PERTAINS TO	
51-125	GUN, MACH.,
	CAL. 30, BROWNG,
	M1919A6
C94543	STOCK, SHOUL-
	DER, ASS'Y.

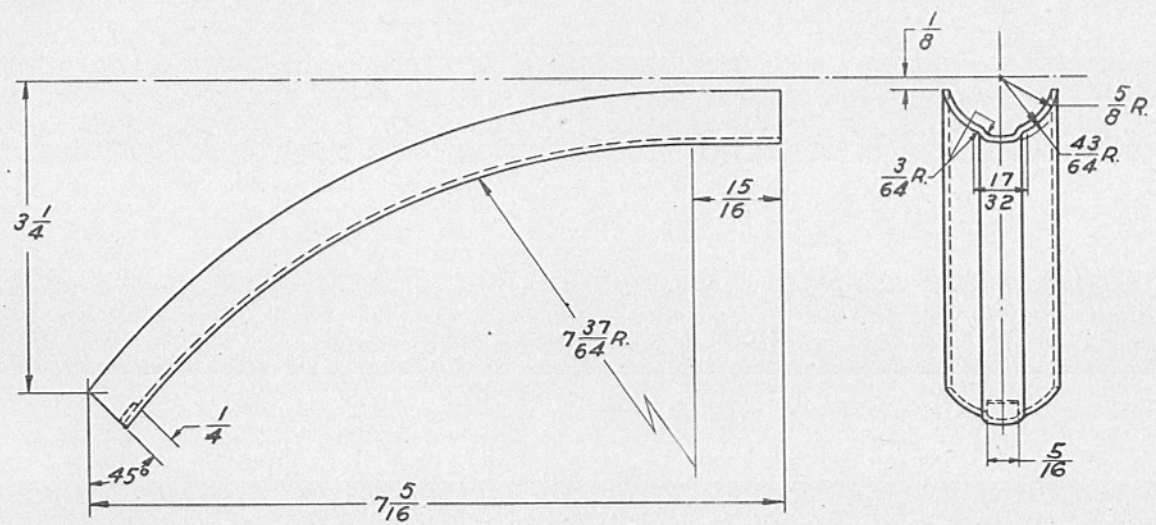

REINFORCE, SHOULDER STOCK
STEEL WD1010
.0478 (NO. 18 U.S.S. GAGE) THICK
MANUFACTURING COMPONENT

WITH, B224700, C94543 AND C121094 SUPERSEDES OLD VELLUM C121094 UNDER REVISION DATE OF

SCALE 1/1

B224849

TOLERANCE ON DIMENSIONS NOT OTHERWISE SPECIFIED
DECIMAL ± —
FRACTIONAL ± 1/64
ANGULAR ± 2°

DRAFTSMAN	TRACER	L'D'G DRAFTSMAN
D. O. F.	D. O. F.	AHR
CHECKED HWJ.		CHIEF DRAFTSMAN

SUBMITTED: A. H. Roe

APPROVED BY ORDER OF THE CHIEF OF ORDNANCE: Geo. L. Kuhn
CAPT. ORD. DEPT., U. S. A.

ORDNANCE DEPT., U. S. A.

MADE AT ROCK ISLAND ARSENAL

HEAT TREATMENT AND FINAL FINISH

PHYSICAL PROPERTIES	
Y. P.	
T. S.	
EL. 2	
RED	
BR.	
ROCK.	
SCL.	

OCTOBER 10, 1942

REVISIONS

1	7-22-43		

DRG. PERTAINS TO

51-125	GUN, MACH.,
	CAL. 30 BROWNG
	M1919A6
C94543	STOCK, SHOUL-
	DER, ASS'Y.

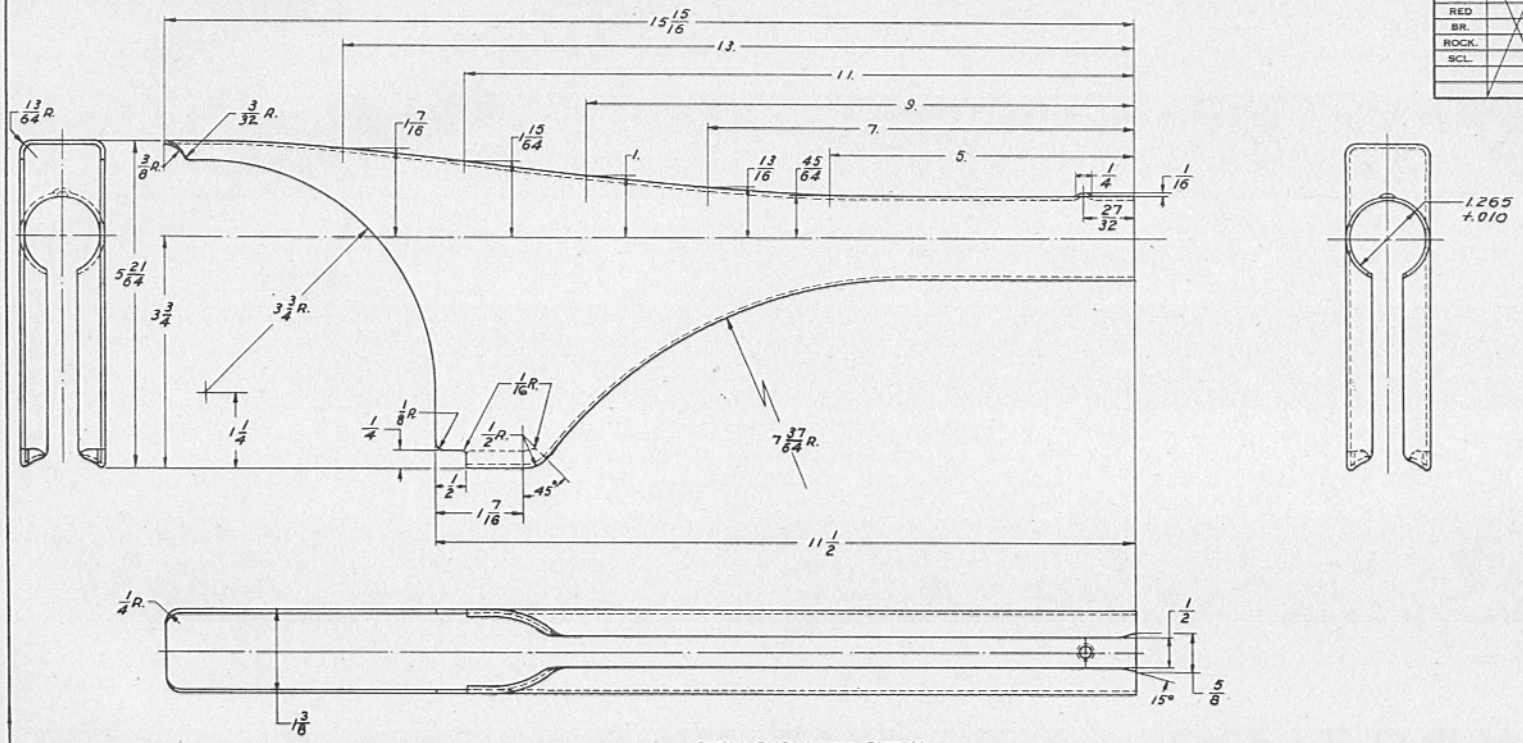

BODY, SHOULDER STOCK
STEEL WD1010
.0478 (NO. 18 U.S.S. GAGE) THICK
MANUFACTURING COMPONENT

TOLERANCE ON DIMENSIONS NOT OTHERWISE SPECIFIED
DECIMAL ± —
FRACTIONAL ± 1/64
ANGULAR ± 2°

DRAFTSMAN	TRACER	L.D.G. DRAFTSMAN
B.O.F.	D.O.F.	A.W.R.
CHECKED		CHIEF DRAFTSMAN

SUBMITTED:
A.W. Roe

APPROVED BY ORDER OF THE CHIEF OF ORDNANCE:
Geo. G. Thomas
CAPT. ORD. DEPT., U.S.A.

ORDNANCE DEPT., U.S.A.
MADE AT ROCK ISLAND ARSENAL

WITH B224700, B224849 AND C94543 SUPERSEDES OLD VELLUM C121094 UNDER REVISION DATE OF 7-22-43

SCALE 1/1 C121094

HEAT TREATMENT AND FINAL FINISH
PHOSPHATE BLACK

PHYSICAL PROPERTIES	
Y. P.	
T. S.	
EL. 2	
RED	
BR.	
ROCK.	
SCL.	

JULY 22, 1943
REVISIONS

DRG. PERTAINS TO	
51-125	GUN, MACH., CAL. .30 BROWNG M1919A6

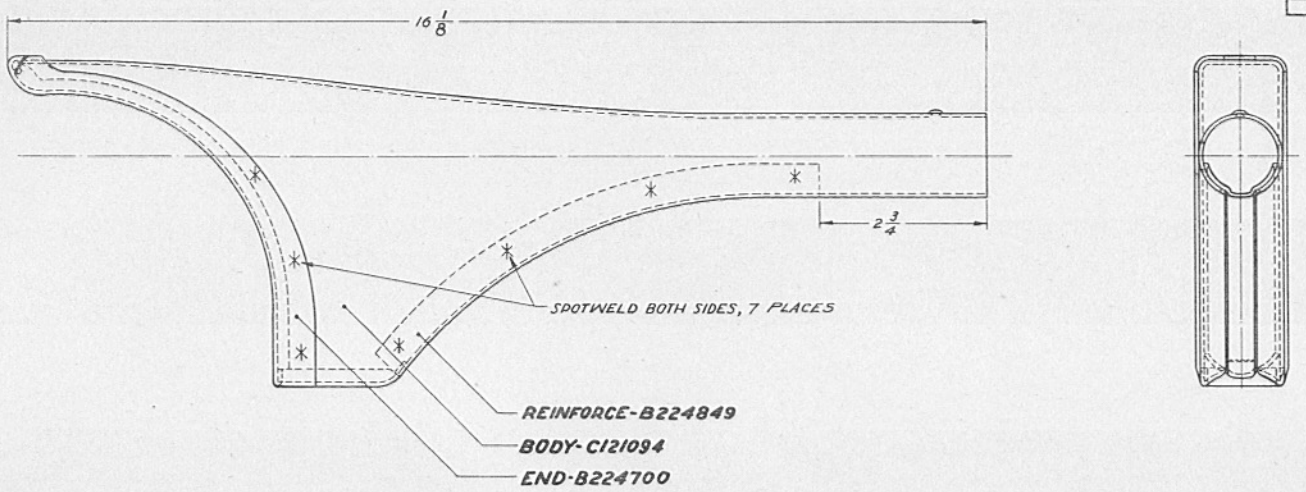

STOCK, SHOULDER, ASSEMBLY (C94543)

WELDING DIAGRAM

WITH B224700, B224849 AND C121094
SUPERSEDES OLD VELLUM C121094
UNDER REVISION DATE OF

0 1 2 3 4 5 6 7 8 9 10 11 INCHES

C94543

TOLERANCE ON DIMENSIONS NOT OTHERWISE SPECIFIED
DECIMAL ± —
FRACTIONAL ± 1/32
ANGULAR ± —

DRAFTSMAN	TRACER	L'D'S DRAFTSMAN
B.O.F.	B.O.F.	A.M.R.
CHIEF DRAFTSMAN		

SUBMITTED:
A.M.Roe

APPROVED BY ORDER OF THE CHIEF OF ORDNANCE
Chas. C. Kirkpatrick
CHIEF ORD. DEPT., U. S. A.

ORDNANCE DEPT., U. S. A.
MADE AT ROCK ISLAND ARSENAL